LPDDR4

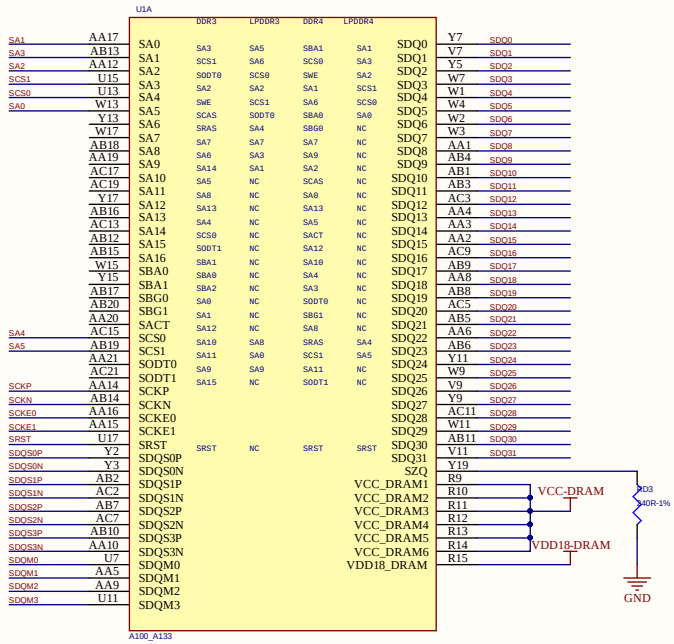

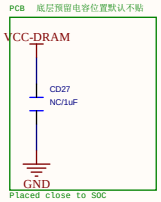

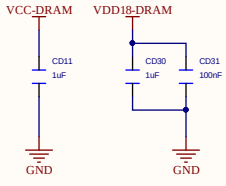

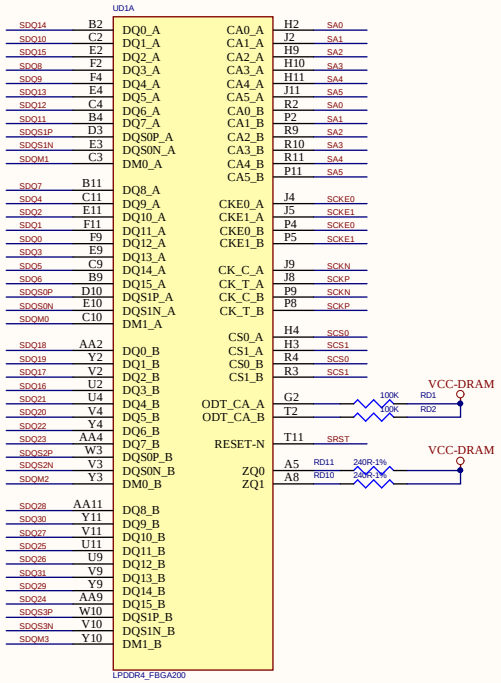

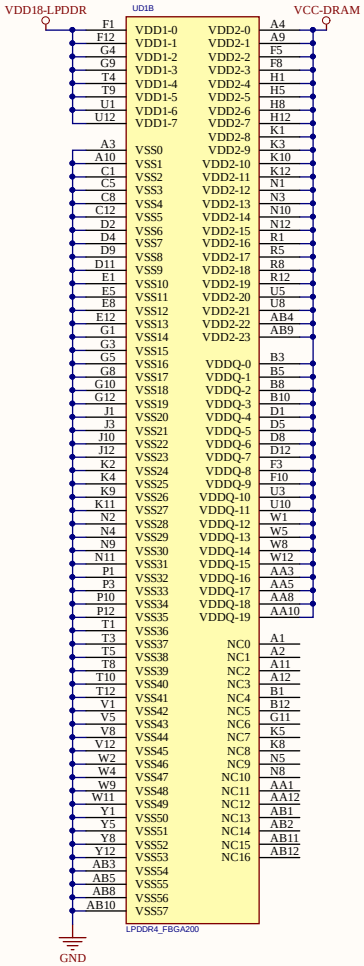

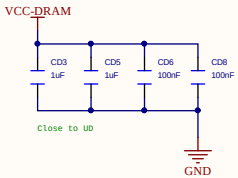

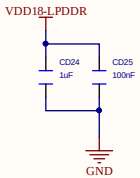

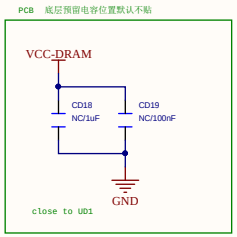

AllWinner Technology Co.,Ltd		
Design Name: A100_A133_REF_LPDDR4_32bitx1		
Size: A	Page Name: LPDDR4 32X1	Rev
Date:	Sheet 7 of 15	