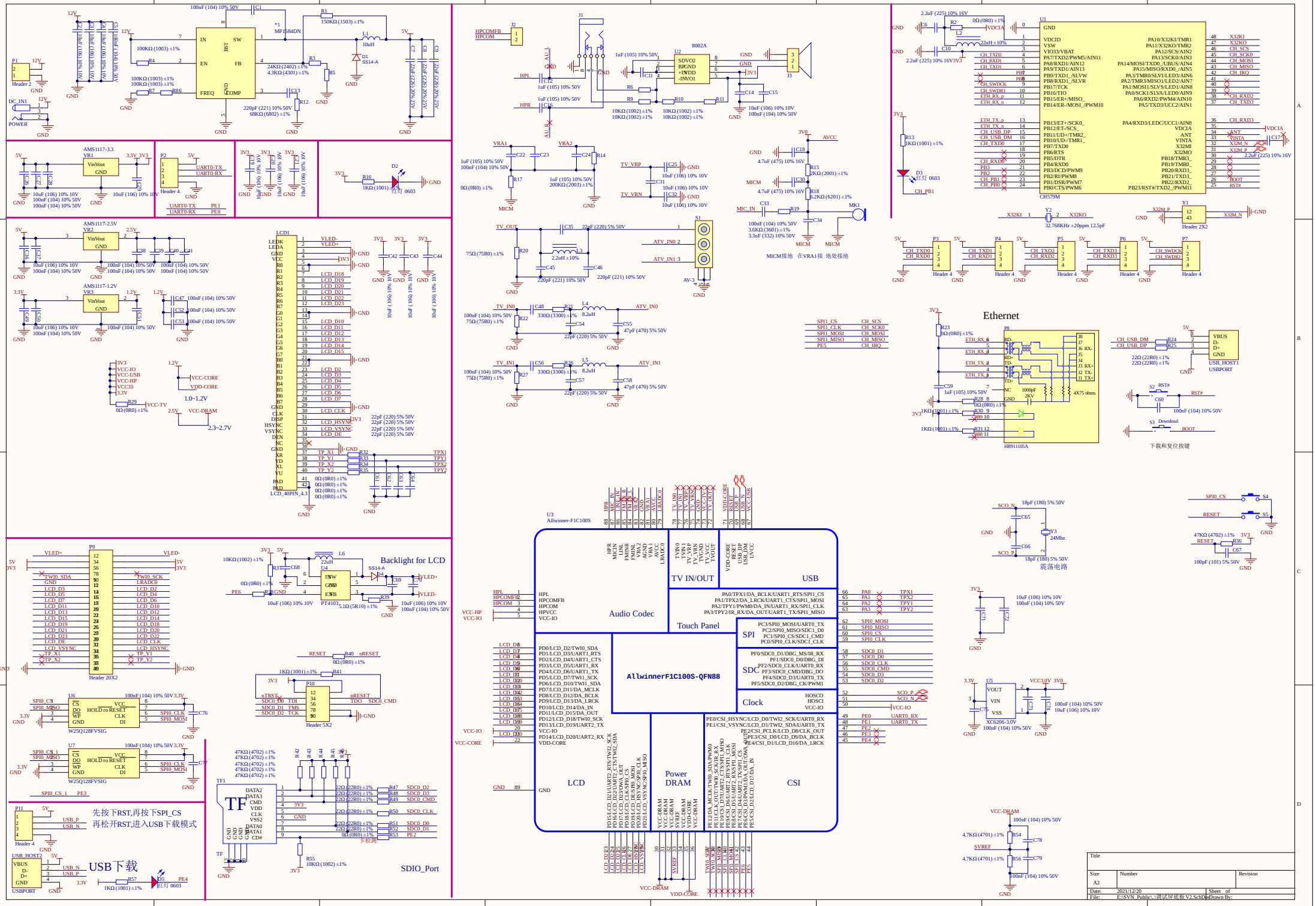
Ethernet
Backlight for LCD
USB下载
SDIO_Port
AllwinnerF1C100S-QFN88
TV IN/OUT
USB
Audio Codec
Touch Panel
SPI
SDC
Clock
LCD
Power DRAM
CSI
先按下RST,再按下SPI_CS
再松开RST,进入USB下载模式
Title
Size A2
Number
Revision
Date: 2021/12/20
Sheet of
File: E:\SVN_Public\...
Drawn By: