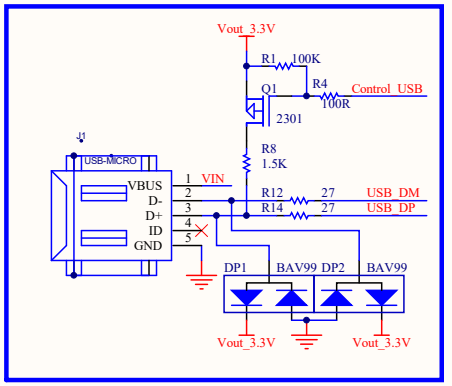
Vout_3.3V
R1 100K
Q1
R4 100R
Control_USB
2301
R8 1.5K
J4
USB-MICRO
VBUS
D-
D+
ID
GND
VIN
R12 27
R14 27
USB_DM
USB_DP
DP1
BAV99
DP2
BAV99
Vout_3.3V
Vout_3.3V

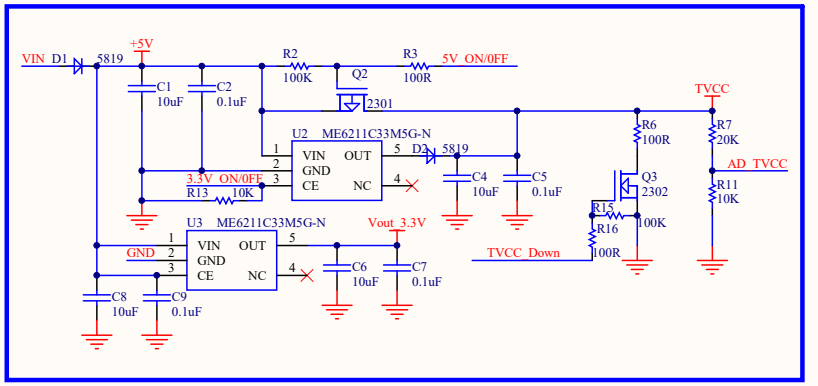
VIN_D1
5819
+5V
C1 10uF
C2 0.1uF
R2 100K
R3 100R
5V_ON/0FF
Q2
2301
TVCC
U2 ME6211C33M5G-N
VIN
GND
CE
OUT
NC
D3
5819
3.3V_ON/0FF
R13 10K
C4 10uF
C5 0.1uF
R6 100R
R7 20K
AD_TVCC
R11 10K
Q3
2302
R15
R16 100K
100R
U3 ME6211C33M5G-N
Vout_3.3V
GND
C6 10uF
C7 0.1uF
TVCC_Down
C8 10uF
C9 0.1uF

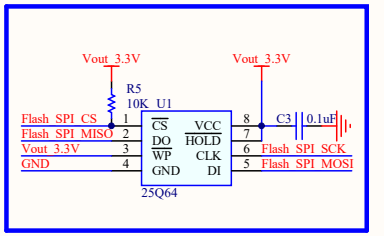
Vout_3.3V
Vout_3.3V
R5 10K
U1
Flash_SPI_CS
Flash_SPI_MISO
Vout_3.3V
GND
CS
DO
WP
GND
VCC
HOLD
CLK
DI
C3 0.1uF
Flash_SPI_SCK
Flash_SPI_MOSI
25Q64

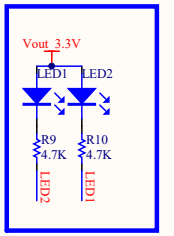
Vout_3.3V
LED1
LED2
R9 4.7K
R10 4.7K
LED2
LED1

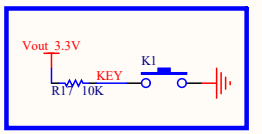
Vout_3.3V
K1
KEY
R17 10K

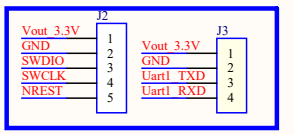
J2
Vout_3.3V
GND
SWDIO
SWCLK
NREST
J3
Vout_3.3V
GND
Uart1_TXD
Uart1_RXD

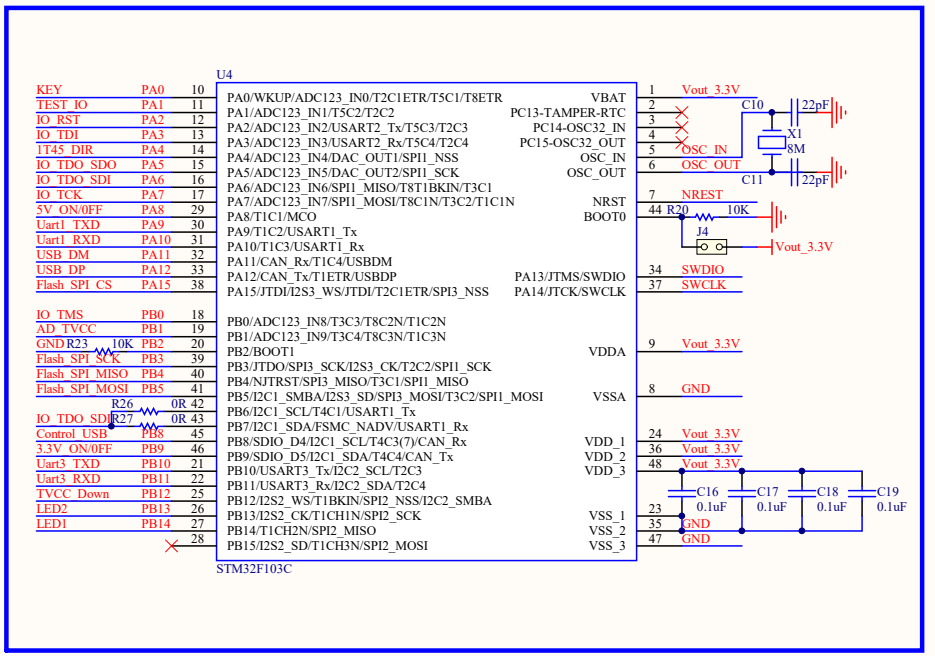
U4
KEY PA0 10
TEST_IO PA1 11
IO_RST PA2 12
IO_TDI PA3 13
1T45_DIR PA4 14
IO_TDO_SDO PA5 15
IO_TDO_SDI PA6 16
IO_TCK PA7 17
5V_ON/0FF PA8 29
Uart1_TXD PA9 30
Uart1_RXD PA10 31
USB_DM PA11 32
USB_DP PA12 33
Flash_SPI_CS PA15 38
IO_TMS PB0 18
AD_TVCC PB1 19
GND R23 10K PB2 20
Flash_SPI_SCK PB3 39
Flash_SPI_MISO PB4 40
Flash_SPI_MOSI PB5 41
R26 0R 42
IO_TDO_SDI R27 0R 43
Control_USB PB8 45
3.3V_ON/0FF PB9 46
Uart3_TXD PB10 21
Uart3_RXD PB11 22
TVCC_Down PB12 25
LED2 PB13 26
LED1 PB14 27
28
PA0/WKUP/ADC123_IN0/T2C1ETR/T5C1/T8ETR VBAT
PA1/ADC123_IN1/T5C2/T2C2 PC13-TAMPER-RTC
PA2/ADC123_IN2/USART2_Tx/T5C3/T2C3 PC14-OSC32_IN
PA3/ADC123_IN3/USART2_Rx/T5C4/T2C4 PC15-OSC32_OUT
PA4/ADC123_IN4/DAC_OUT1/SPI1_NSS OSC_IN
PA5/ADC123_IN5/DAC_OUT2/SPI1_SCK OSC_OUT
PA6/ADC123_IN6/SPI1_MISO/T8T1BKIN/T3C1
PA7/ADC123_IN7/SPI1_MOSI/T8C1N/T3C2/T1C1N NRST
PA8/T1C1/MCO BOOT0
PA9/T1C2/USART1_Tx
PA10/T1C3/USART1_Rx
PA11/CAN_Rx/T1C4/USBDM
PA12/CAN_Tx/T1ETR/USBDP PA13/JTMS/SWDIO
PA15/JTDI/I2S3_WS/JTDI/T2C1ETR/SPI3_NSS PA14/JTCK/SWCLK
PB0/ADC123_IN8/T3C3/T8C2N/T1C2N
PB1/ADC123_IN9/T3C4/T8C3N/T1C3N
PB2/BOOT1 VDDA
PB3/JTDO/SPI3_SCK/I2S3_CK/T2C2/SPI1_SCK
PB4/NJTRST/SPI3_MISO/T3C1/SPI1_MISO
PB5/I2C1_SMBA/I2S3_SD/SPI3_MOSI/T3C2/SPI1_MOSI VSSA
PB6/I2C1_SCL/T4C1/USART1_Tx
PB7/I2C1_SDA/FSMC_NADV/USART1_Rx
PB8/SDIO_D4/I2C1_SCL/T4C3(7)/CAN_Rx VDD_1
PB9/SDIO_D5/I2C1_SDA/T4C4/CAN_Tx VDD_2
PB10/USART3_Tx/I2C2_SCL/T2C3 VDD_3
PB11/USART3_Rx/I2C2_SDA/T2C4
PB12/I2S2_WS/T1BKIN/SPI2_NSS/I2C2_SMBA
PB13/I2S2_CK/T1CH1N/SPI2_SCK VSS_1
PB14/T1CH2N/SPI2_MISO VSS_2
PB15/I2S2_SD/T1CH3N/SPI2_MOSI VSS_3
1 Vout_3.3V
2
3
4
5 OSC_IN
6 OSC_OUT
7 NREST
44 R20 10K
J4
Vout_3.3V
34 SWDIO
37 SWCLK
9 Vout_3.3V
8 GND
24 Vout_3.3V
36 Vout_3.3V
48 Vout_3.3V
C10 22pF
X1 8M
C11 22pF
C16 0.1uF
C17 0.1uF
C18 0.1uF
C19 0.1uF
23 GND
35 GND
47 GND
STM32F103C

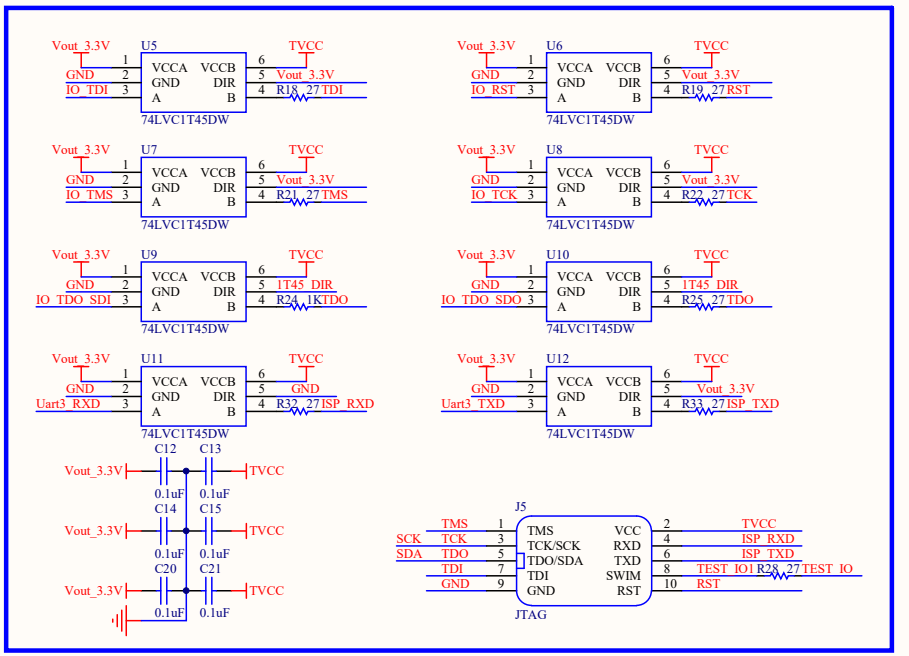
U5
Vout_3.3V
GND
IO_TDI
TVCC
Vout_3.3V
R18 27 TDI
74LVC1T45DW
U6
IO_RST
R19 27 RST
U7
IO_TMS
R21 27 TMS
U8
IO_TCK
R22 27 TCK
U9
IO_TDO_SDI
1T45_DIR
R24 1K TDO
U10
IO_TDO_SDO
R25 27 TDO
U11
Uart3_RXD
R32 27 ISP_RXD
U12
Uart3_TXD
R33 27 ISP_TXD
VCCA
VCCB
GND
DIR
A
B
C12 0.1uF
C13 0.1uF
C14 0.1uF
C15 0.1uF
C20 0.1uF
C21 0.1uF
J5
TMS
TCK/SCK
TDO/SDA
TDI
GND
VCC
RXD
TXD
SWIM
RST
SCK
SDA
ISP_RXD
ISP_TXD
TEST_IO1 R28 27 TEST_IO
RST
JTAG

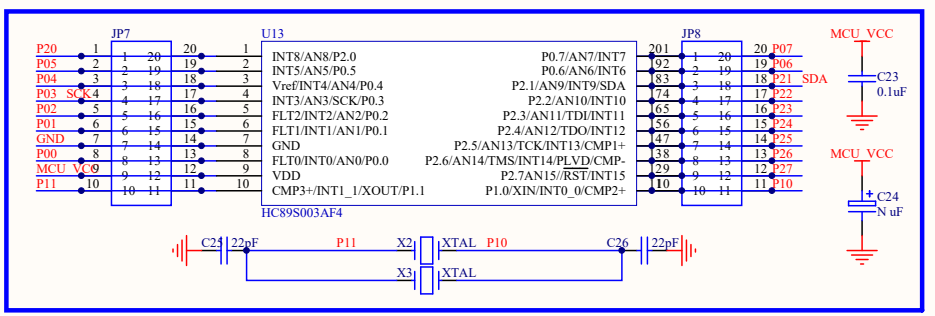
JP7
P20
P05
P04
P03 SCK
P02
P01
GND
P00
MCU_VCC
P11
U13
INT8/AN8/P2.0
INT5/AN5/P0.5
Vref/INT4/AN4/P0.4
INT3/AN3/SCK/P0.3
FLT2/INT2/AN2/P0.2
FLT1/INT1/AN1/P0.1
GND
FLT0/INT0/AN0/P0.0
VDD
CMP3+/INT1_1/XOUT/P1.1
P0.7/AN7/INT7
P0.6/AN6/INT6
P2.1/AN9/INT9/SDA
P2.2/AN10/INT10
P2.3/AN11/TDI/INT11
P2.4/AN12/TDO/INT12
P2.5/AN13/TCK/INT13/CMP1+
P2.6/AN14/TMS/INT14/PLVD/CMP-
P2.7AN15//RST/INT15
P1.0/XIN/INT0_0/CMP2+
HC89S003AF4
JP8
P07
P06
P21 SDA
P22
P23
P24
P25
P26
P27
P10
MCU_VCC
C23 0.1uF
C24 N uF
C25 22pF
P11
X2
XTAL
P10
C26 22pF
X3
XTAL

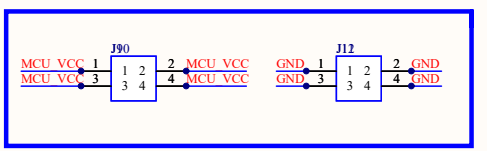
J90
MCU_VCC
J12
GND

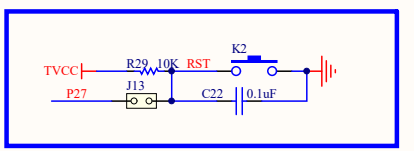
TVCC
R29 10K RST
K2
P27
J13
C22 0.1uF

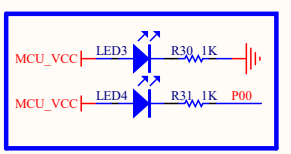
MCU_VCC
LED3
R30 1K
LED4
R31 1K P00

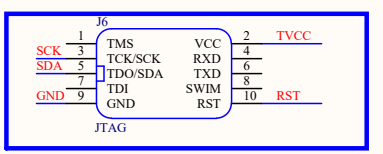
J6
SCK
SDA
GND
TMS
TCK/SCK
TDO/SDA
TDI
GND
VCC
RXD
TXD
SWIM
RST
TVCC
RST
JTAG

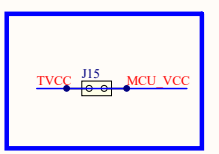
TVCC
J15
MCU_VCC