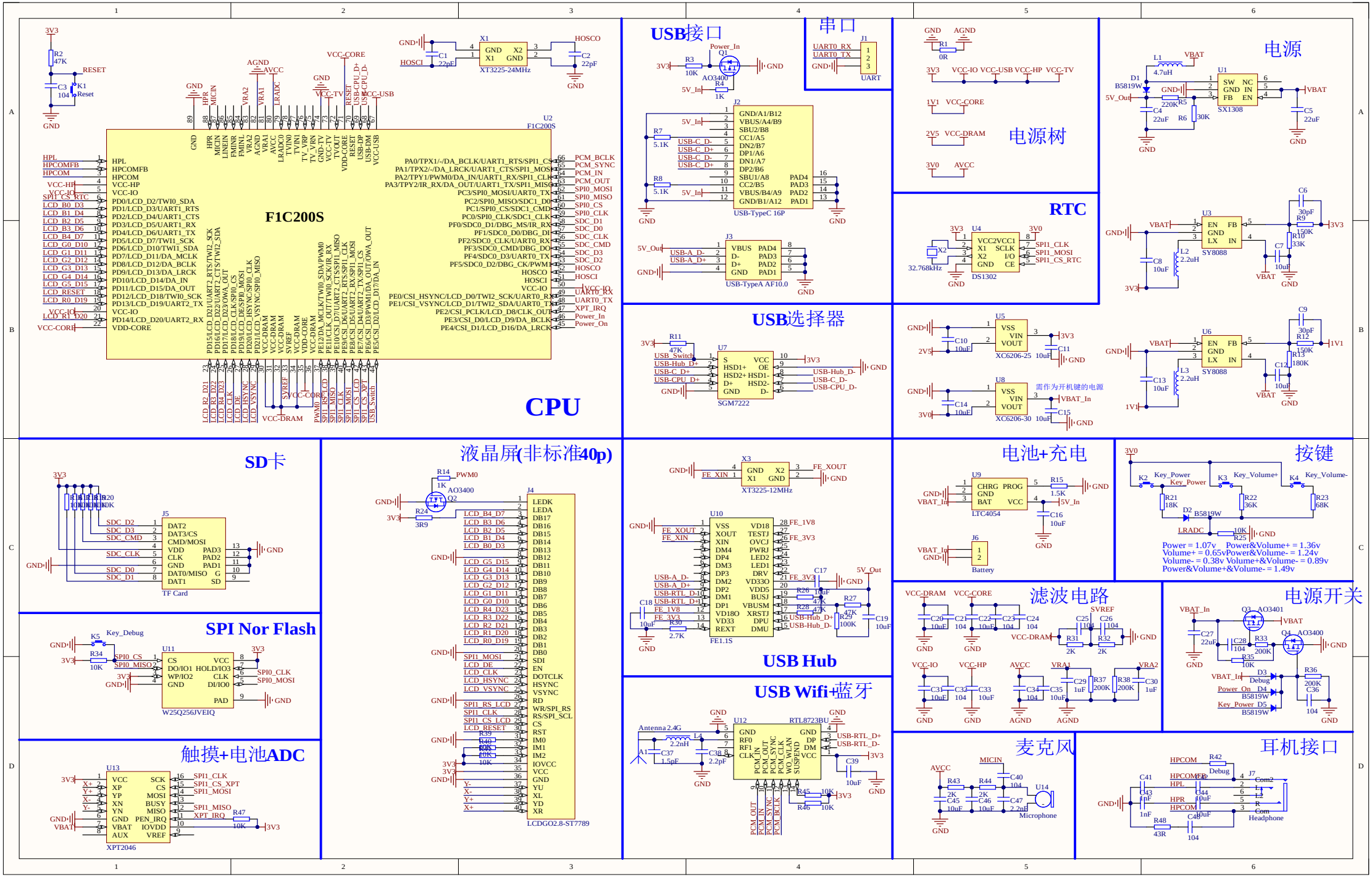
CPU
F1C200S
U2
F1C200S
USB接口
串口
UART
电源树
电源
RTC
DS1302
SY8088
XC6206-25
XC6206-30
需作为开机键的电源
USB选择器
SGM7222
USB-TypeC 16P
USB-TypeA AF10.0
XT3225-24MHz
XT3225-12MHz
SD卡
TF Card
液晶屏(非标准40p)
LCDGO2.8-ST7789
SPI Nor Flash
W25Q256JVEIQ
触摸+电池ADC
XPT2046
USB Hub
FE1.1S
USB Wifi+蓝牙
RTL8723BU
电池+充电
LTC4054
Battery
按键
Power = 1.07v Power&Volume+ = 1.36v
Volume+ = 0.65vPower&Volume- = 1.24v
Volume- = 0.38v Volume+&Volume- = 0.89v
Power&Volume+&Volume- = 1.49v
滤波电路
电源开关
麦克风
Microphone
耳机接口
Headphone

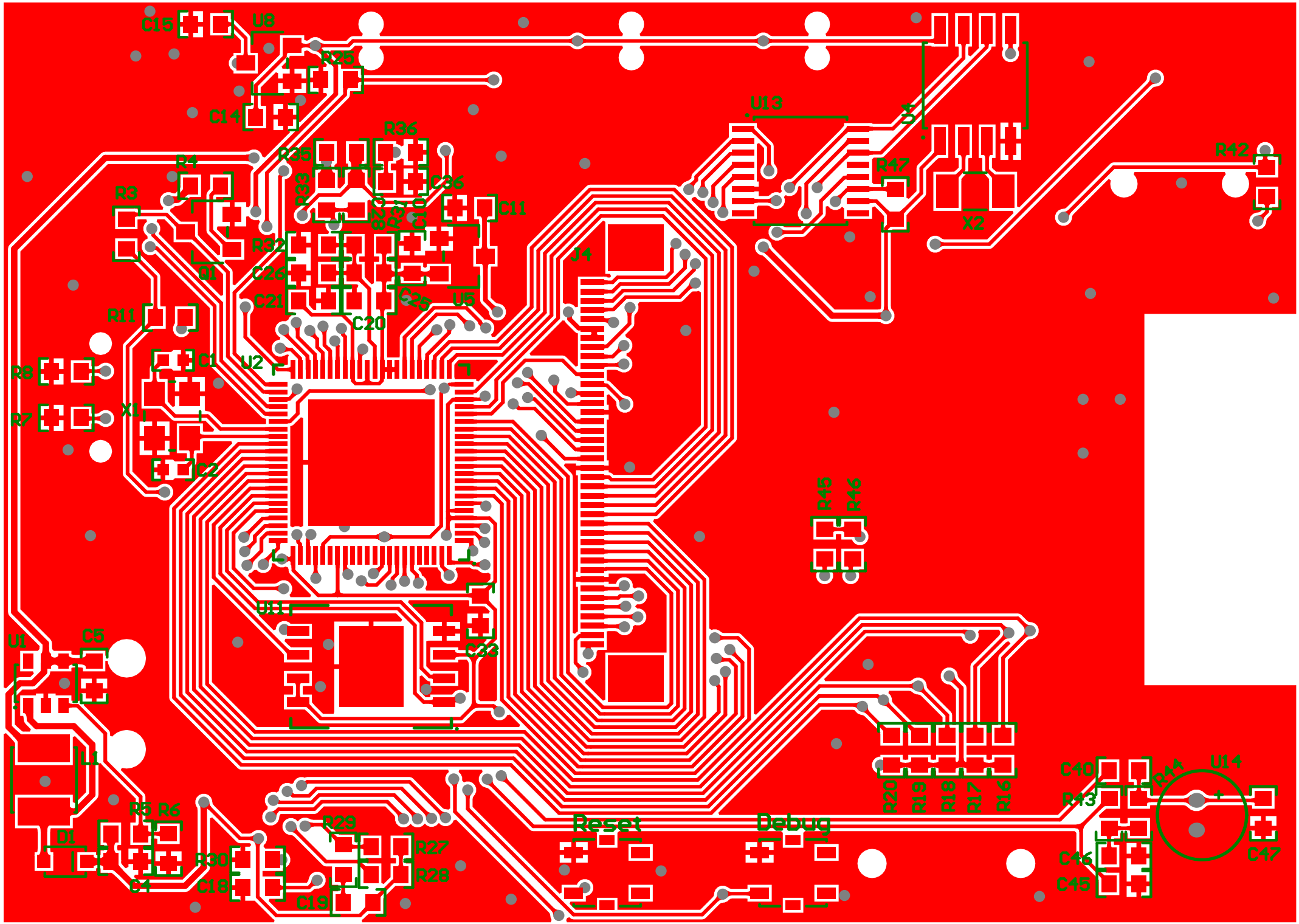
C15
U8
R25
C14
R36
R35
R33
C36
C11
R4
R3
R32
Q1
C26
C21
C20
C25
U5
J4
U13
X1
R47
X2
R42
R11
C1
U2
R8
R7
X1
C2
R45
R46
U11
C33
U1
C5
L1
R5
R6
D1
C4
R30
C18
R29
R27
R28
C19
Reset
Debug
R20
R19
R18
R17
R16
C40
R43
U14
C46
C45
C47

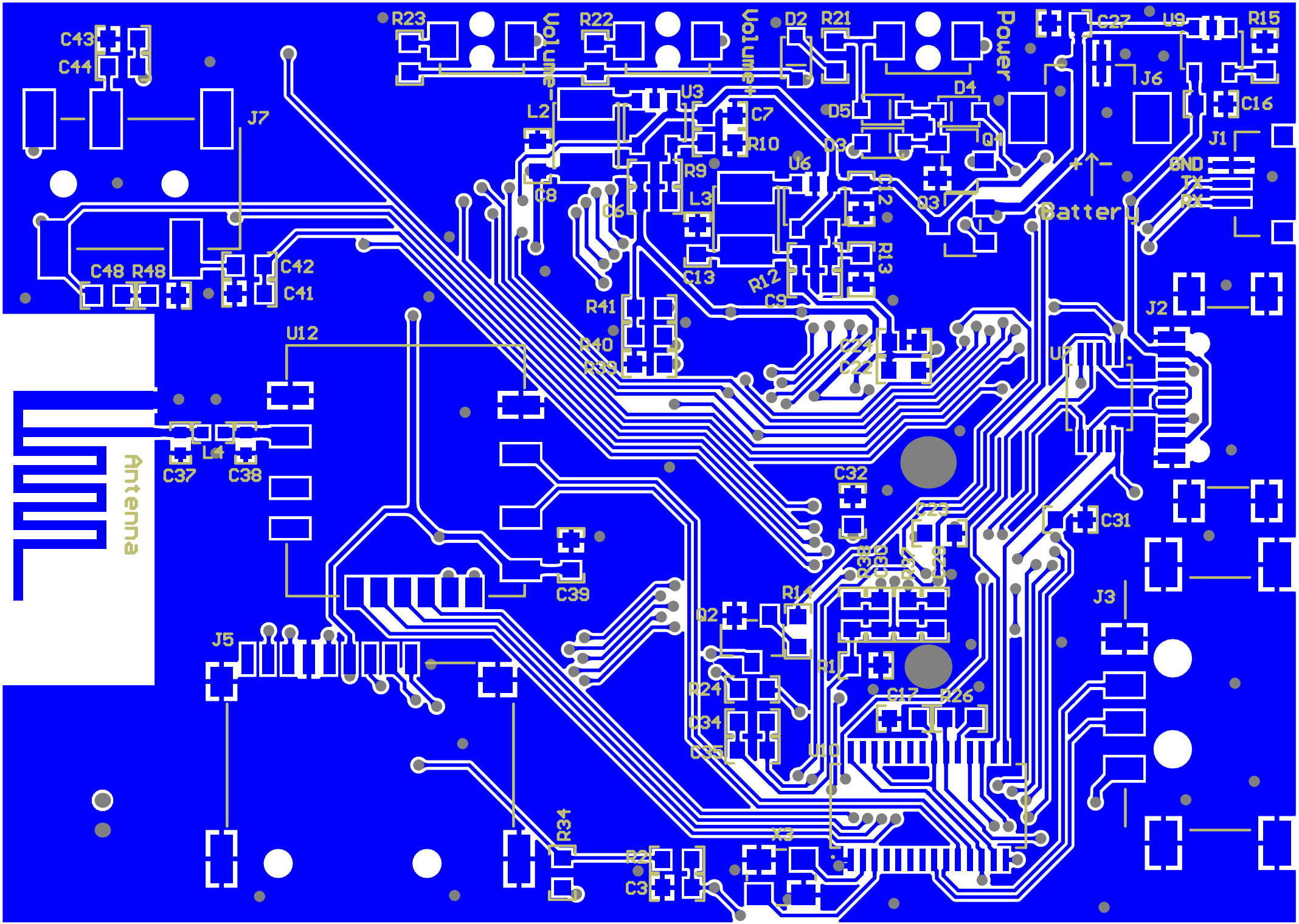
C43
C44
J7
R23
Volume-
R22
Volume+
D2
R21
Power
C27
U9
R15
J6
C16
J1
GND
TX
RX
U3
L2
C7
R10
D5
D4
Q4
D3
U6
R9
C8
C6
L3
C12
Q3
Battery
C48
R48
C42
C41
C13
R12
R13
C9
R41
R40
R39
J2
U12
C24
C22
U7
Antenna
L4
C37
C38
C32
C23
C31
C39
R14
Q2
J3
J5
R1
R24
C17
R26
C34
C35
U10
R34
X3
R2
C3