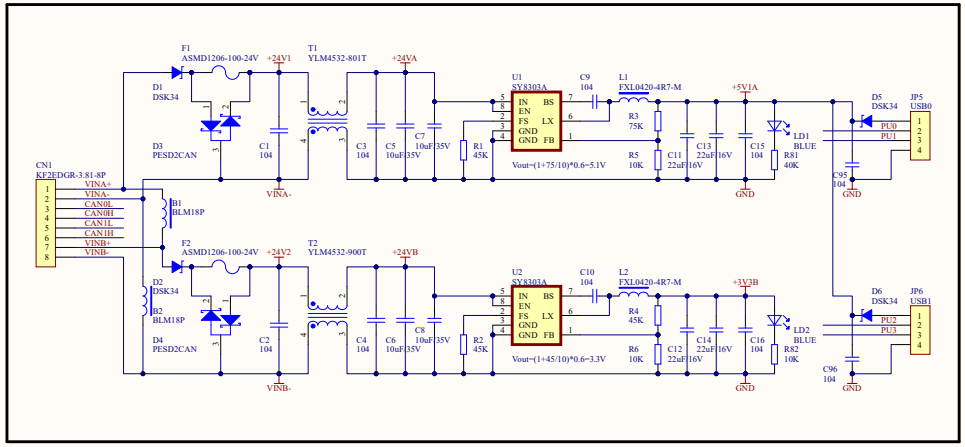
CN1
KF2EDGR-3.81-8P
F1
ASMD1206-100-24V
+24V1
T1
YLM4532-801T
+24VA
U1
SY8303A
Vout=(1+75/10)*0.6=5.1V
+5V1A
D5
DSK34
JP5
USB0
F2
ASMD1206-100-24V
+24V2
T2
YLM4532-900T
+24VB
U2
SY8303A
Vout=(1+45/10)*0.6=3.3V
+3V3B
D6
DSK34
JP6
USB1
VINA-
VINB-
GND

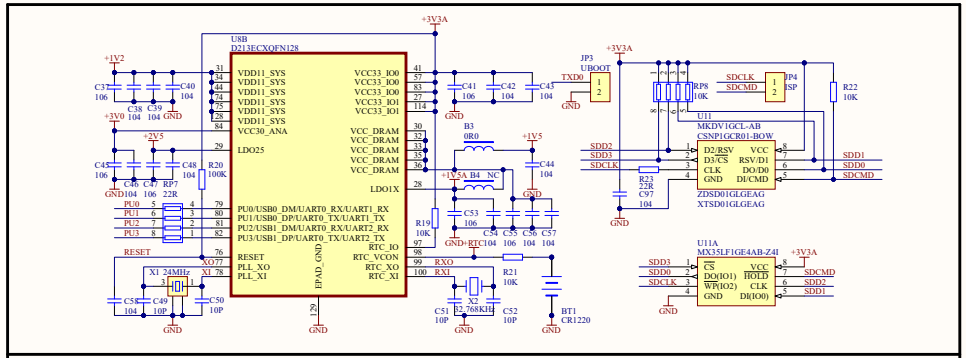
U8B
D213ECXQFN128
+3V3A
+1V2
+3V0
+2V5
+1V5A
+1V5
JP3
UBOOT
TXD0
RP8
10K
SDCLK
SDCMD
JP4
ISP
R22
10K
U11
MKDV1GCL-AB
CSNP1GCR01-BOW
ZDSD01GLGEAG
XTSD01GLGEAG
SDD1
SDD0
SDCMD
X1 24MHz
X2 32.768KHz
BT1
CR1220
U11A
MX35LF1GE4AB-Z4I
SDD3
SDD0
SDCLK
SDCMD
SDD2
SDD1

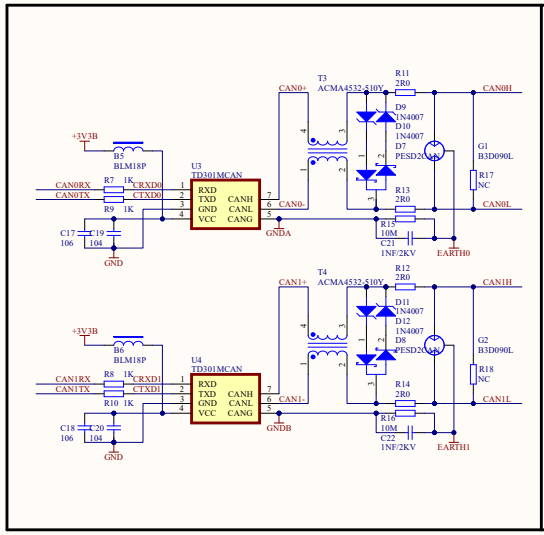
+3V3B
B5
BLM18P
CAN0RX
CAN0TX
U3
TD301MCAN
RXD
TXD
GND
VCC
CANH
CANL
CANG
CAN0+
CAN0-
T3
ACMA4532-510Y
R11
2R0
CAN0H
CAN0L
D9
1N4007
D10
1N4007
D7
PESD2CAN
G1
B3D090L
R17
NC
R13
2R0
R15
10M
C21
1NF/2KV
EARTH0
GNDA
+3V3B
B6
BLM18P
CAN1RX
CAN1TX
U4
TD301MCAN
CAN1+
CAN1-
T4
ACMA4532-510Y
R12
2R0
CAN1H
CAN1L
D11
1N4007
D12
1N4007
D8
PESD2CAN
G2
B3D090L
R18
NC
R14
2R0
R16
10M
C22
1NF/2KV
EARTH1
GNDB

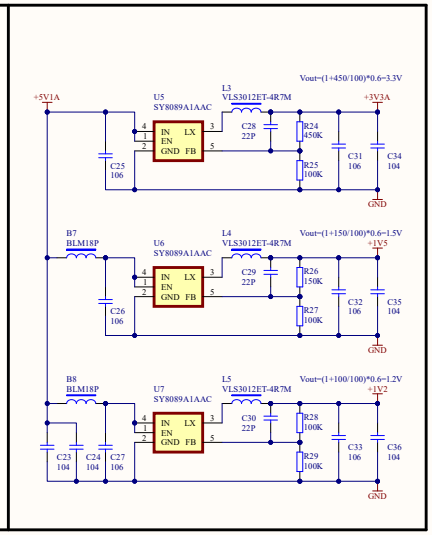
+5V1A
U5
SY8089A1AAC
Vout=(1+450/100)*0.6=3.3V
+3V3A
B7
BLM18P
U6
SY8089A1AAC
Vout=(1+150/100)*0.6=1.5V
+1V5
B8
BLM18P
U7
SY8089A1AAC
Vout=(1+100/100)*0.6=1.2V
+1V2
L3
VLS3012ET-4R7M
L4
VLS3012ET-4R7M
L5
VLS3012ET-4R7M
GND

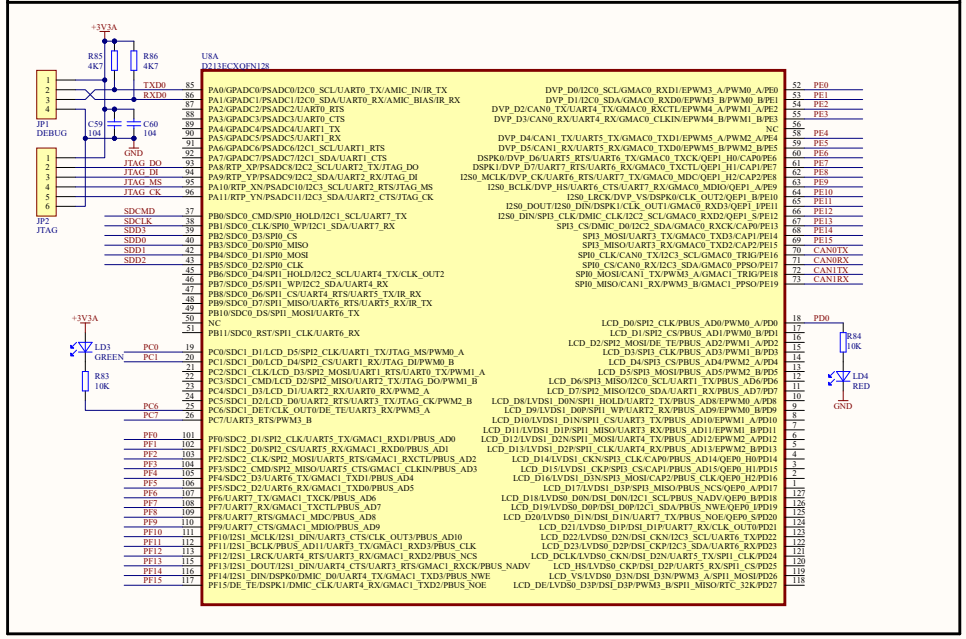
+3V3A
R85
4K7
R86
4K7
U8A
D213ECXQFN128
JP1
DEBUG
JP2
JTAG
LD3
GREEN
R83
10K
R84
10K
LD4
RED
PA0/GPADC0/PSADC0/I2C0_SCL/UART0_TX/AMIC_IN/IR_TX
PA1/GPADC1/PSADC1/I2C0_SDA/UART0_RX/AMIC_BIAS/IR_RX
PA2/GPADC2/PSADC2/UART0_RTS
PA3/GPADC3/PSADC3/UART0_CTS
PA4/GPADC4/PSADC4/UART1_TX
PA5/GPADC5/PSADC5/UART1_RX
PA6/GPADC6/PSADC6/I2C1_SCL/UART1_RTS
PA7/GPADC7/PSADC7/I2C1_SDA/UART1_CTS
PA8/RTP_XP/PSADC8/I2C2_SCL/UART2_TX/JTAG_DO
PA9/RTP_YP/PSADC9/I2C2_SDA/UART2_RX/JTAG_DI
PA10/RTP_XN/PSADC10/I2C3_SCL/UART2_RTS/JTAG_MS
PA11/RTP_YN/PSADC11/I2C3_SDA/UART2_CTS/JTAG_CK
PB0/SDC0_CMD/SPI0_HOLD/I2C1_SCL/UART7_TX
PB1/SDC0_CLK/SPI0_WP/I2C1_SDA/UART7_RX
PB2/SDC0_D3/SPI0_CS
PB3/SDC0_D0/SPI0_MISO
PB4/SDC0_D1/SPI0_MOSI
PB5/SDC0_D2/SPI0_CLK
PB6/SDC0_D4/SPI1_HOLD/I2C2_SCL/UART4_TX/CLK_OUT2
PB7/SDC0_D5/SPI1_WP/I2C2_SDA/UART4_RX
PB8/SDC0_D6/SPI1_CS/UART4_RTS/UART5_TX/IR_RX
PB9/SDC0_D7/SPI1_MISO/UART6_RTS/UART5_RX/IR_TX
PB10/SDC0_DS/SPI1_MOSI/UART6_TX
PB11/SDC0_RST/SPI1_CLK/UART6_RX
PC0/SDC1_D1/LCD_D5/SPI2_CLK/UART1_TX/JTAG_MS/PWM0_A
PC1/SDC1_D0/LCD_D4/SPI2_CS/UART1_RX/JTAG_DI/PWM0_B
PC2/SDC2_CLK/SPI2_MOSI/UART1_RTS/UART0_TX/PWM1_A
PC3/SDC1_CMD/LCD_D2/SPI2_MISO/UART2_TX/JTAG_DO/PWM1_B
PC4/SDC1_D3/LCD_D1/UART2_RX/UART0_RX/PWM2_A
PC5/SDC1_D2/LCD_D0/UART2_RTS/UART3_TX/JTAG_CK/PWM2_B
PC6/SDC1_DET/CLK_OUT0/DE_TE/UART3_RX/PWM3_A
PC7/UART3_RTS/PWM3_B
PF0/SDC2_D1/SPI2_CLK/UART5_TX/GMAC1_RXD1/PBUS_AD0
PF1/SDC2_D0/SPI2_CS/UART5_RX/GMAC1_RXD0/PBUS_AD1
PF2/SDC2_CLK/SPI2_MOSI/UART5_RTS/GMAC1_RXCTL/PBUS_AD2
PF3/SDC2_CMD/SPI2_MISO/UART5_CTS/GMAC1_CLKIN/PBUS_AD3
PF4/SDC2_D3/UART6_TX/GMAC1_TXD1/PBUS_AD4
PF5/SDC2_D2/UART6_RX/GMAC1_TXD0/PBUS_AD5
PF6/UART7_TX/GMAC1_TXCK/PBUS_AD6
PF7/UART7_RX/GMAC1_TXCTL/PBUS_AD7
PF8/UART7_RTS/GMAC1_MDC/PBUS_AD8
PF9/UART7_CTS/GMAC1_MDIO/PBUS_AD9
PF10/I2S1_MCLK/I2S1_DIN/UART3_CTS/CLK_OUT3/PBUS_AD10
PF11/I2S1_BCLK/PBUS_AD11/UART3_TX/GMAC1_RXD3/PBUS_CLK
PF12/I2S1_LRCK/UART4_RTS/UART3_RX/GMAC1_RXD2/PBUS_NCS
PF13/I2S1_DOUT/I2S1_DIN/UART4_CTS/UART3_RTS/GMAC1_RXCK/PBUS_NADV
PF14/I2S1_DIN/DSPK0/DMIC_D0/UART4_TX/GMAC1_TXD3/PBUS_NWE
PF15/DE_TE/DSPK1/DMIC_CLK/UART4_RX/GMAC1_TXD2/PBUS_NOE
DVP_D0/I2C0_SCL/GMAC0_RXD1/EPWM3_A/PWM0_A/PE0
DVP_D1/I2C0_SDA/GMAC0_RXD0/EPWM3_B/PWM0_B/PE1
DVP_D2/CAN0_TX/UART4_TX/GMAC0_RXCTL/EPWM4_A/PWM1_A/PE2
DVP_D3/CAN0_RX/UART4_RX/GMAC0_CLKIN/EPWM4_B/PWM1_B/PE3
NC
DVP_D4/CAN1_TX/UART5_TX/GMAC0_TXD1/EPWM5_A/PWM2_A/PE4
DVP_D5/CAN1_RX/UART5_RX/GMAC0_TXD0/EPWM5_B/PWM2_B/PE5
DSPK0/DVP_D6/UART5_RTS/UART6_TX/GMAC0_TXCK/QEP1_H0/CAP0/PE6
DSPK1/DVP_D7/UART7_RTS/UART6_RX/GMAC0_TXCTL/QEP1_H1/CAP1/PE7
I2S0_MCLK/DVP_CK/UART6_RTS/UART7_TX/GMAC0_MDC/QEP1_H2/CAP2/PE8
I2S0_BCLK/DVP_HS/UART6_CTS/UART7_RX/GMAC0_MDIO/QEP1_A/PE9
I2S0_LRCK/DVP_VS/DSPK0/CLK_OUT2/QEP1_B/PE10
I2S0_DOUT/I2S0_DIN/DSPK1/CLK_OUT1/GMAC0_RXD3/QEP1_I/PE11
I2S0_DIN/SPI3_CLK/DMIC_CLK/I2C2_SCL/GMAC0_RXD2/QEP1_S/PE12
SPI3_CS/DMIC_D0/I2C2_SDA/GMAC0_RXCK/CAP0/PE13
SPI3_MOSI/UART3_TX/GMAC0_TXD3/CAP1/PE14
SPI3_MISO/UART3_RX/GMAC0_TXD2/CAP2/PE15
SPI0_CLK/CAN0_TX/I2C3_SCL/GMAC0_TR3G/PE16
SPI0_CS/CAN0_RX/I2C3_SDA/GMAC0_PPSO/PE17
SPI0_MOSI/CAN1_TX/PWM3_A/GMAC1_TR3G/PE18
SPI0_MISO/CAN1_RX/PWM3_B/GMAC1_PPSO/PE19
LCD_D0/SPI2_CLK/PBUS_AD0/PWM0_A/PD0
LCD_D1/SPI2_CS/PBUS_AD1/PWM0_B/PD1
LCD_D2/SPI2_MOSI/DE_TE/PBUS_AD2/PWM1_A/PD2
LCD_D3/SPI3_CLK/PBUS_AD3/PWM1_B/PD3
LCD_D4/SPI3_CS/PBUS_AD4/PWM2_A/PD4
LCD_D5/SPI3_MOSI/PBUS_AD5/PWM2_B/PD5
LCD_D6/SPI3_MISO/I2C0_SCL/UART1_TX/PBUS_AD6/PD6
LCD_D7/SPI2_MISO/I2C0_SDA/UART1_RX/PBUS_AD7/PD7
LCD_D8/LVDS1_D0N/SPI1_HOLD/UART2_TX/PBUS_AD8/EPWM0_A/PD8
LCD_D9/LVDS1_D0P/SPI1_WP/UART2_RX/PBUS_AD9/EPWM0_B/PD9
LCD_D10/LVDS1_D1N/SPI1_CS/UART3_TX/PBUS_AD10/EPWM1_A/PD10
LCD_D11/LVDS1_D1P/SPI1_MISO/UART3_RX/PBUS_AD11/EPWM1_B/PD11
LCD_D12/LVDS1_D2N/SPI1_MOSI/UART4_TX/PBUS_AD12/EPWM2_A/PD12
LCD_D13/LVDS1_D2P/SPI1_CLK/UART4_RX/PBUS_AD13/EPWM2_B/PD13
LCD_D14/LVDS1_CKN/SPI3_CLK/CAP0/PBUS_AD14/QEP0_H0/PD14
LCD_D15/LVDS1_CKP/SPI3_CS/CAP1/PBUS_AD15/QEP0_H1/PD15
LCD_D16/LVDS1_D3N/SPI3_MOSI/CAP2/PBUS_CLK/QEP0_H2/PD16
LCD_D17/LVDS1_D3P/SPI3_MISO/PBUS_NCS/QEP0_A/PD17
LCD_D18/LVDS0_D0N/DSI_D0N/I2C1_SCL/PBUS_NADV/QEP0_B/PD18
LCD_D19/LVDS0_D0P/DSI_D0P/I2C1_SDA/PBUS_NWE/QEP0_I/PD19
LCD_D20/LVDS0_D1N/DSI_D1N/UART7_TX/PBUS_NOE/QEP0_S/PD20
LCD_D21/LVDS0_D1P/DSI_D1P/UART7_RX/CLK_OUT0/PD21
LCD_D22/LVDS0_D2N/DSI_CKN/I2C3_SCL/UART6_TX/PD22
LCD_D23/LVDS0_D2P/DSI_CKP/I2C3_SDA/UART6_RX/PD23
LCD_DCLK/LVDS0_CKN/DSI_D2N/UART5_TX/SPI1_CLK/PD24
LCD_HS/LVDS0_CKP/DSI_D2P/UART5_RX/SPI1_CS/PD25
LCD_VS/LVDS0_D3N/DSI_D3N/PWM3_A/SPI1_MOSI/PD26
LCD_DE/LVDS0_D3P/DSI_D3P/PWM3_B/SPI1_MISO/RTC_32K/PD27

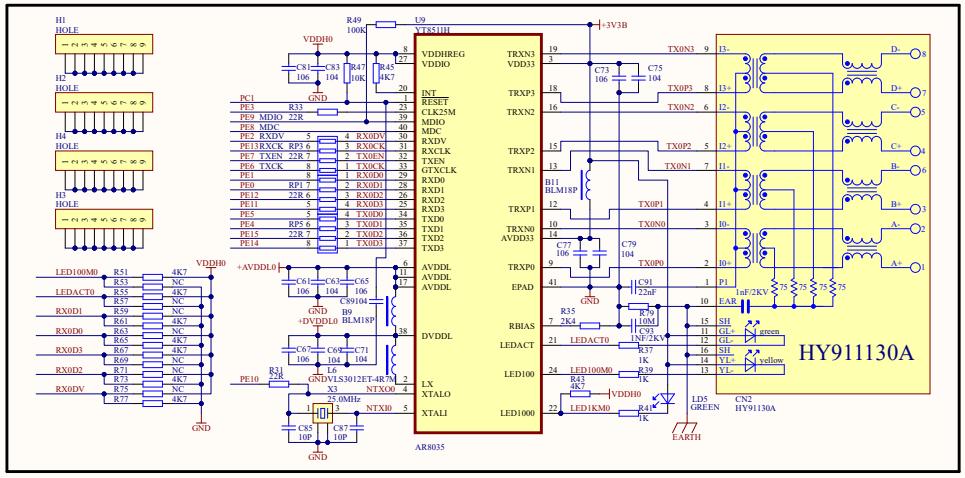
H1
HOLE
H2
HOLE
H4
HOLE
H3
HOLE
U9
YT8511H
VDDHREG
VDDIO
INT
RESET
CLK25M
MDIO
MDC
RXDV
RXCLK
TXEN
GTXCLK
RXD0
RXD1
RXD2
RXD3
TXD0
TXD1
TXD2
TXD3
AVDDL
DVDDL
LX
XTALO
XTALI
TRXN3
TRXP3
TRXN2
TRXP2
TRXN1
TRXP1
TRXN0
TRXP0
EPAD
RBIAS
LEDACT
LED100
LED1000
AVDD33
AR8035
HY911130A
CN2
HY911130A
LD5
GREEN
EARTH
LED100M0
LEDACT0
RX0D1
RX0D0
RX0D3
RX0D2
RX0DV
+3V3B
VDDH0
+AVDDL0
+DVDDL0
GND

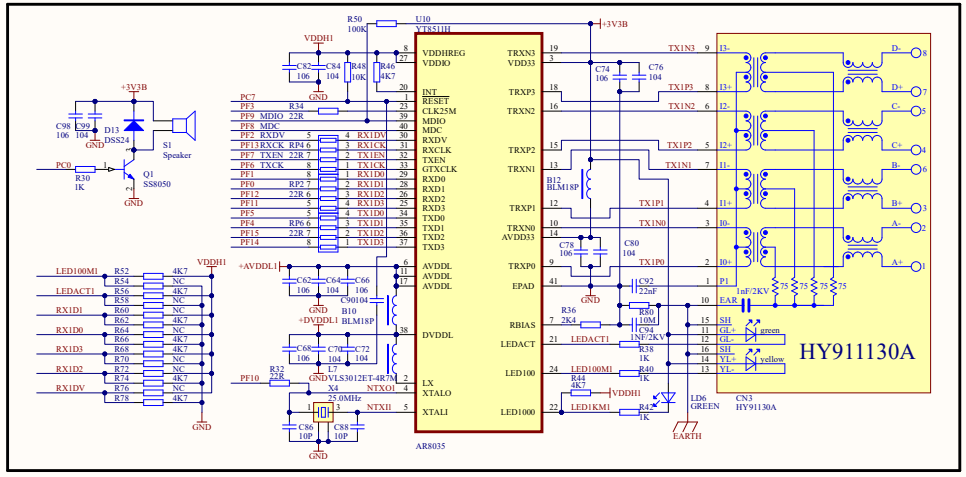
U10
YT8511H
VDDHREG
VDDIO
INT
RESET
CLK25M
MDIO
MDC
RXDV
RXCLK
TXEN
GTXCLK
RXD0
RXD1
RXD2
RXD3
TXD0
TXD1
TXD2
TXD3
AVDDL
DVDDL
LX
XTALO
XTALI
TRXN3
TRXP3
TRXN2
TRXP2
TRXN1
TRXP1
TRXN0
TRXP0
EPAD
RBIAS
LEDACT
LED100
LED1000
AVDD33
AR8035
HY911130A
CN3
HY911130A
LD6
GREEN
EARTH
S1
Speaker
Q1
SS8050
LED100M1
LEDACT1
RX1D1
RX1D0
RX1D3
RX1D2
RX1DV
+3V3B
VDDH1
+AVDDL1
+DVDDL1
GND