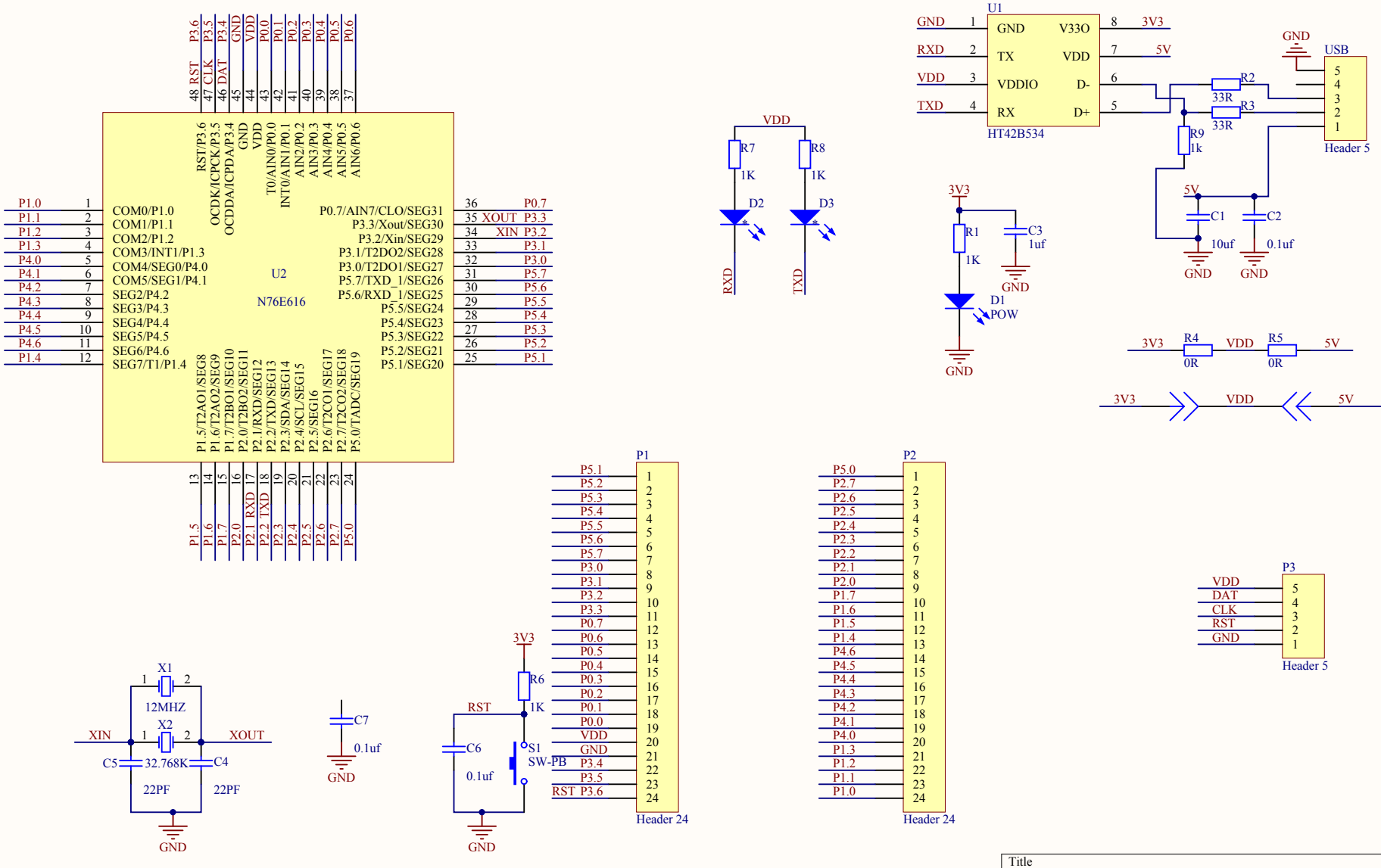

Title		
Size A4	Number	Revision
Date: 2017/12/22	Sheet of	
File: G:\创微模块\N76E616\JZ_N76E616.Sch	Drawn By:	