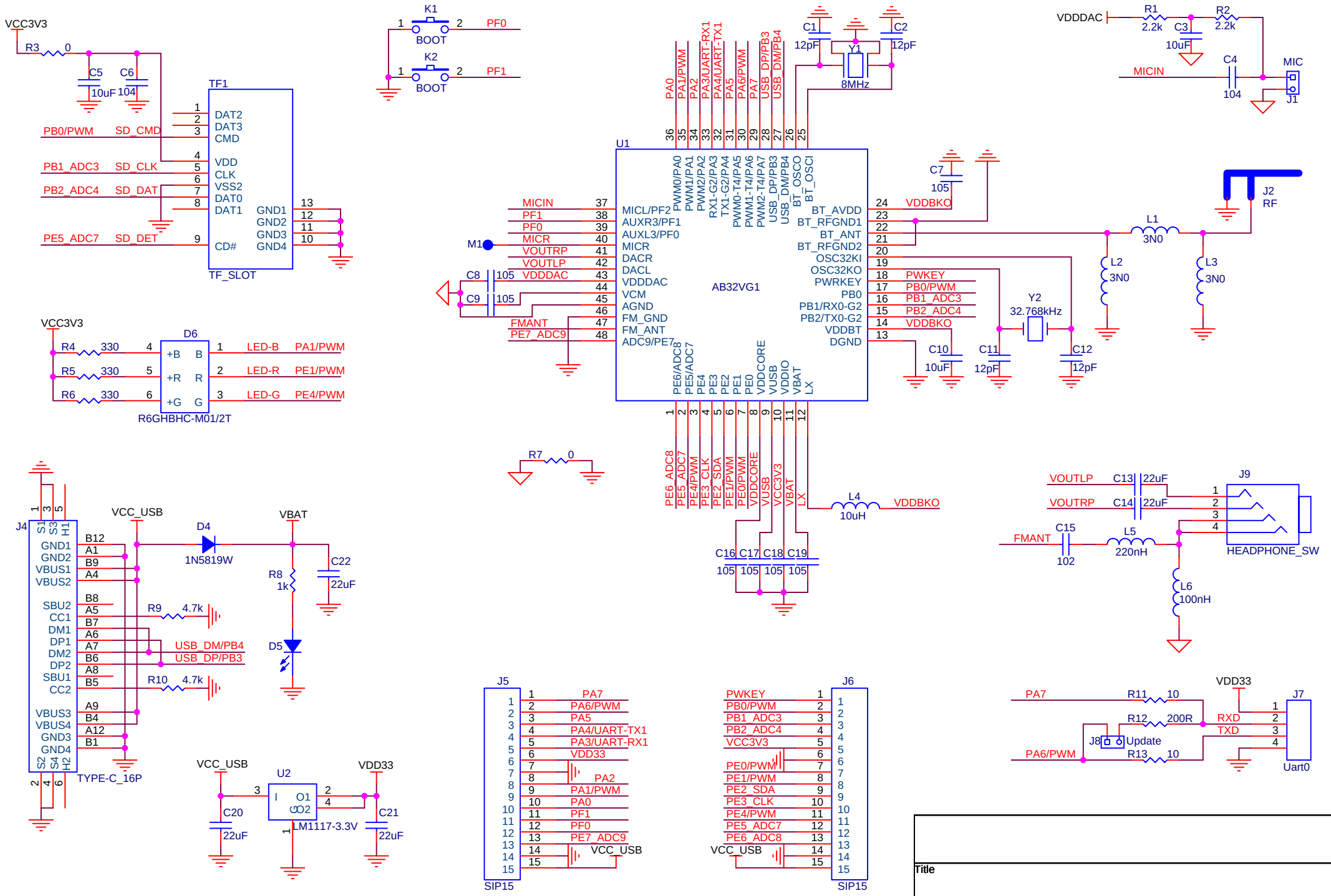
VCC3V3
R3 0
C5 10uF
C6 104
TF1
DAT2
DAT3
CMD
VDD
CLK
VSS2
DAT0
DAT1
CD#
GND1
GND2
GND3
GND4
PB0/PWM SD_CMD
PB1_ADC3 SD_CLK
PB2_ADC4 SD_DAT
PE5_ADC7 SD_DET
TF_SLOT
K1
BOOT
PF0
K2
BOOT
PF1
U1
AB32VG1
MICL/PF2
AUXR3/PF1
AUXL3/PF0
MICR
DACR
DACL
VDDDAC
VCM
AGND
FM_GND
FM_ANT
ADC9/PE7
BT_AVDD
BT_RFGND1
BT_ANT
BT_RFGND2
OSC32KI
OSC32KO
PWRKEY
PB0
PB1/RX0-G2
PB2/TX0-G2
VDDBT
DGND
PE6/ADC8
PE5/ADC7
PE4
PE3
PE2
PE1
PE0
VDDCORE
VUSB
VDDIO
VBAT
LX
PWM0/PA0
PWM1/PA1
PWM2/PA2
RX1-G2/PA3
TX1-G2/PA4
PWM0-T4/PA5
PWM1-T4/PA6
PWM2-T4/PA7
USB_DM/PB3
USB_DP/PB4
BT_OSCO
BT_OSCI
MICIN
PF1
PF0
MICR
VOUTRP
VOUTLP
VDDDAC
FMANT
PE7_ADC9
M1
C8 105
C9 105
C1 12pF
C2 12pF
Y1 8MHz
C7 105
VDDBKO
PWKEY
PB0/PWM
PB1_ADC3
PB2_ADC4
VDDBKO
C10 10uF
C11 12pF
C12 12pF
Y2 32.768kHz
L1 3N0
L2 3N0
L3 3N0
J2 RF
VDDDAC
R1 2.2k
R2 2.2k
C3 10uF
C4 104
MICIN
MIC
J1
D6
R6GHBHC-M01/2T
R4 330
R5 330
R6 330
LED-B PA1/PWM
LED-R PE1/PWM
LED-G PE4/PWM
R7 0
L4 10uH
VDDBKO
C16 105
C17 105
C18 105
C19 105
J9
HEADPHONE_SW
VOUTLP C13 22uF
VOUTRP C14 22uF
FMANT C15 102
L5 220nH
L6 100nH
J4
TYPE-C_16P
GND1
GND2
VBUS1
VBUS2
SBU2
CC1
DM1
DP1
DM2
DP2
SBU1
CC2
VBUS3
VBUS4
GND3
GND4
VCC_USB
D4 1N5819W
VBAT
R8 1k
C22 22uF
R9 4.7k
R10 4.7k
D5
USB_DM/PB4
USB_DP/PB3
U2
LM1117-3.3V
VCC_USB
VDD33
C20 22uF
C21 22uF
J5
SIP15
PA7
PA6/PWM
PA5
PA4/UART-TX1
PA3/UART-RX1
VDD33
PA2
PA1/PWM
PA0
PF1
PF0
PE7_ADC9
VCC_USB
J6
SIP15
PWKEY
PB0/PWM
PB1_ADC3
PB2_ADC4
VCC3V3
PE0/PWM
PE1/PWM
PE2_SDA
PE3_CLK
PE4/PWM
PE5_ADC7
PE6_ADC8
VCC_USB
VDD33
PA7 R11 10
R12 200R
J8 Update
PA6/PWM R13 10
RXD
TXD
J7
Uart0
Title
Size A4
Document Number
Rev V1.0
Date: Tuesday, January 04, 2022
Sheet 1 of 1